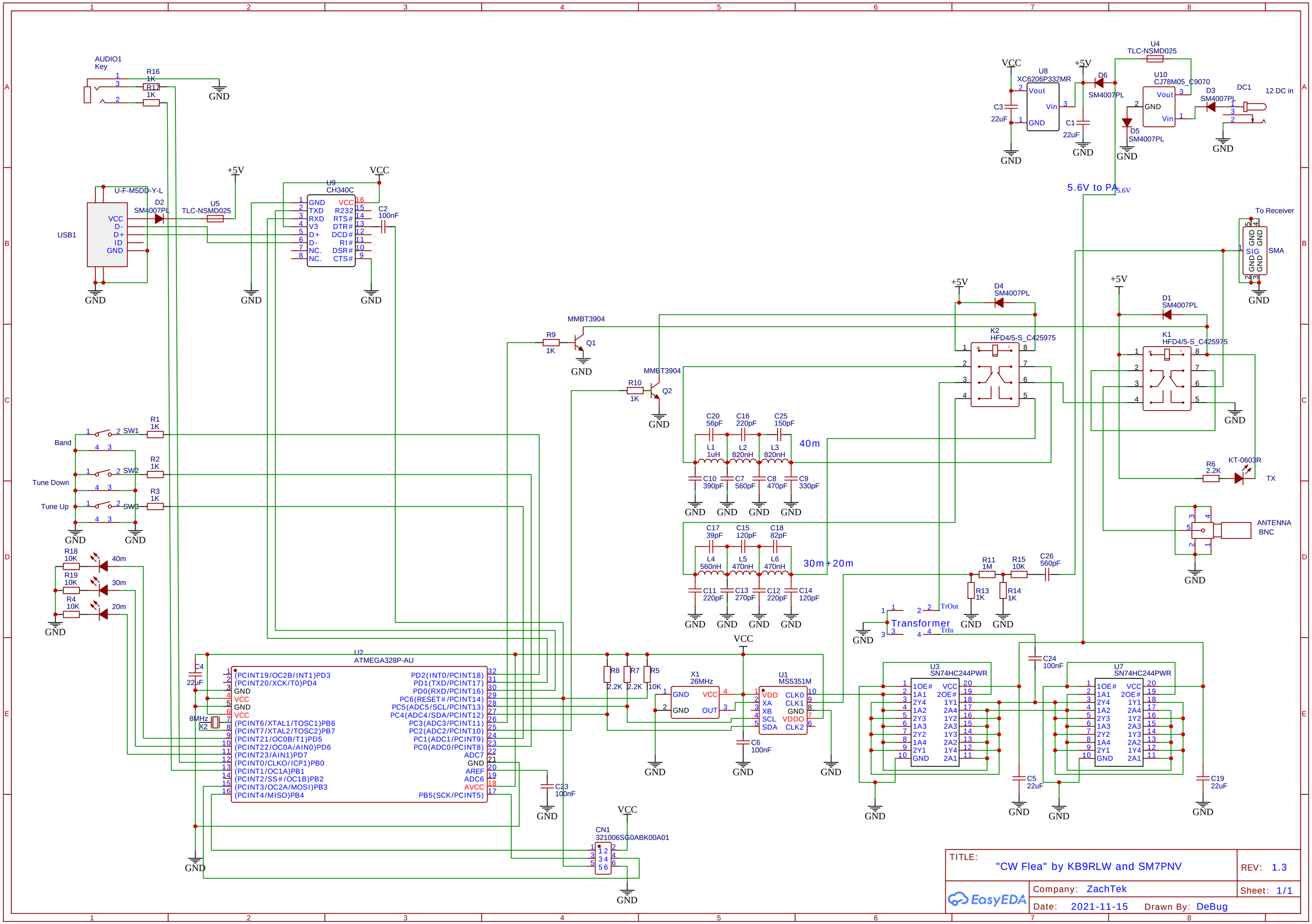


| | |
|---|---|
| TITLE: "CW Flea" by KB9RLW and SM7PNV | REV: 1.3 |
| EasyEDA | Company: ZachTek |
| | Sheet: 1/1 |
| | Date: 2021-11-15 Drawn By: DeBug |